www.bj-gear.com

bj·gear

Designed for

Demanding environments

Waterproof NG bearing units & stainless steel bearing units

Customisation is our standard

Bearing design

BJ-Gear A/S offers two types of bearing units;
NG waterproof bearing units and stainless steel bearing units.

The bearing units are designed for the food industry and other industries with continuously stringent demands on material resistance and an easy-to-clean design.

Our NG bearing units are waterproof, and to reduce the risk of bacteria growth, the design is characterised by a smooth surface and rounded corners. The NG bearings are maintenance free and resistant to all cleaning products and to most chemicals.

The protection is IP66 ensuring that the products can be cleaned from all directions.

Possible to obtain a higher ingress protection than IP66
When installed in environments exceeding IP66, for example where the bearing is submerged or cleaning with high pressure occurs, it is recommended that the bearing is regularly refilled with grease. This is done by injecting grease trough the grease nipple. This grease serves as a barrier for the water gaining access to the lifetime lubricated bearing within the housing.

Waterproof NG bearing units

Features and advantages:

- Compact and strong flange house with the cover bolted to the bearing housing.
- The flange housing is made of polyurethane (PUR), which is of extreme stability and strength.
- Grease nipples, M6x1, of stainless steel for optimal food grade grease filling, prevents condensation in the bearing housing.
- The flange housing is mounted with a spherical NG lifetime lubricated ball bearing with eccentric locking collar.
- Self-aligning.
- Measurements are similar to market standards.
- The flange housing can be mounted in all angles.
- Stainless spherical radial insert bearings for an easy and precise assembly.
- Insert bearings are lubricated with NSF H1 reg. grease according to DIN 51825, Halal, Kosher etc.
- Private label available.

Blue NG bearings

Our Blue NG Bearings are crafted from high-quality blue polyurethane (PUR), making them ideal for the food industry. These bearings feature steel-reinforced mounting holes for added durability and strength. The blue color allows for easy identification of dirt and debris, ensuring a hygienic environment. Additionally, they come with hygienic bolts, nuts, and spacers, including spacers designed for easy cleaning access.

- Made from blue polyurethane (PUR)
- Ideal for food industry
- Stainless steel reinforced mounting holes
- Easy identification of dirt and debris
- Stainless hygienic bolts, nuts, and spacers
- Stainless spacers for easy cleaning access

Choose Blue NG Bearings for a reliable, hygienic, and efficient solution to your bearing needs.

Technical specifications & drawings NG bearing units

Manufactured in Denmark

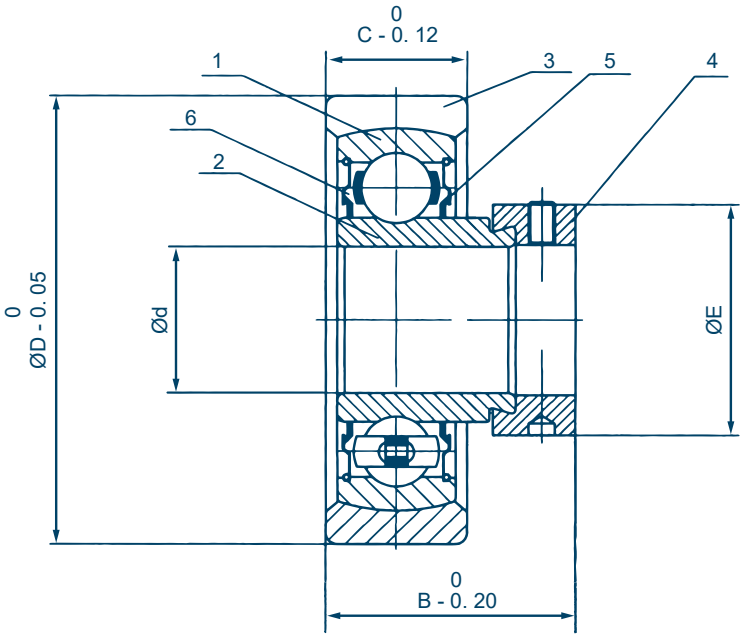

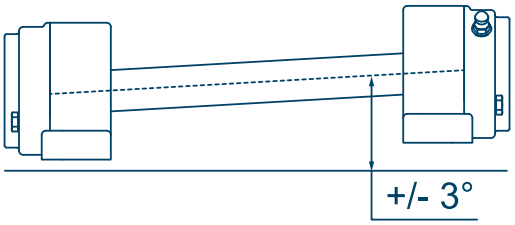

The construction permits a misalignment of the bearing, of up to +/-3°

Diameter tolerance: h11
Surface roughness: Recommended 0,2 µm - 0,8 µm Ra
Hardness: Min. 45 HRC

Technical specifications	
1. Outer ring	1. Outer ring
2. Inner ring	2. Inner ring
3. Cover ring	3. Cover ring
4. Eccentric collar	4. Eccentric collar
5. Sealings	5. Sealings
6. Grease	6. Grease

Operating temperature: -30°C to +100°C briefly.

NG spherical radial insert bearing with:

- Stainless steel inner ring
- Stainless steel balls
- Adjustable stainless cover ring
- Stainless steel eccentric locking collar
- Stainless steel P-sealings

Technical specifications	NG 20	NG 25	NG 30	NG 35	NG 40	NG 50	NG 60
d [mm]	20,00	25,00	30,00	35,00	40,00	50,00	60,00
D [mm]	55,00	62,00	72,00	80,00	90,00	100,00	120,00
B [mm]	31,50	32,00	37,20	40,00	45,20	46,50	55,30
C [mm]	16,00	17,00	21,00	21,00	25,00	26,00	28,00
E [mm]	33,00	37,50	44,00	51,00	58,00	70,00	83,50
m [kg]	0,24	0,31	0,49	0,64	0,89	1,07	1,78

m (mass)

F4 - 4-bolt flange bearing units

Waterproof

Technical specifications & drawings

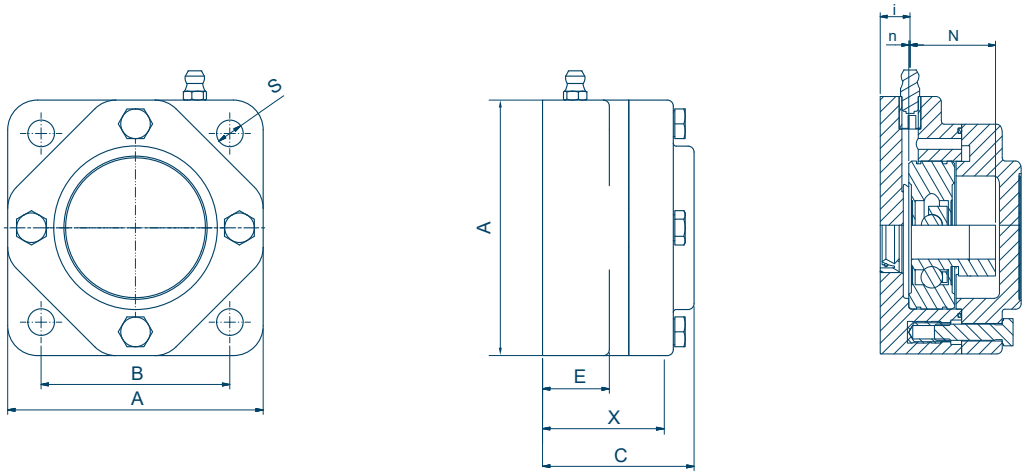

TYPE F4	Item no. closed cover	Item no. open cover	A	B	C	E	S	X	i	n	N	Weight [kg]
Ø20 mm	NGB20F40	NGB20F41	86	63,5	51	22,5	9	43	11	0,5	31,0	0,52
Ø25 mm	NGB25F40	NGB25F41	95	70,0	52	22,5	9	44	11	0,5	31,5	0,63
Ø30 mm	NGB30F40	NGB30F41	108	82,5	58	22,5	11	48	11	0,5	36,7	0,91
Ø35 mm	NGB35F40	NGB35F41	118	92,0	60	22,5	13	50	11	0,5	39,4	1,10
Ø40 mm	NGB40F40	NGB40F41	130	101,5	65	22,5	13	56	11	0,5	44,7	1,50
Ø50 mm	NGB50F40	NGB50F41	143	111,0	70	26,5	17	58	12	0,5	46,0	1,84
Ø60 mm	NGB60F40	NGB60F41	175	143,0	82	28,5	17	70	15	0,5	54,8	3,09

All measurements are in millimeters. When ordering please use the catalogue numbers.

F4 - 4-bolt flange bearing units

Waterproof

Technical specifications & drawings

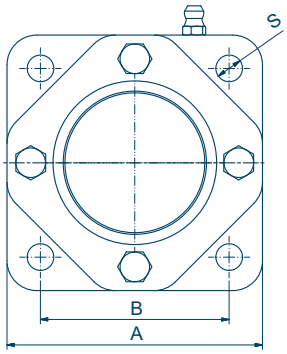

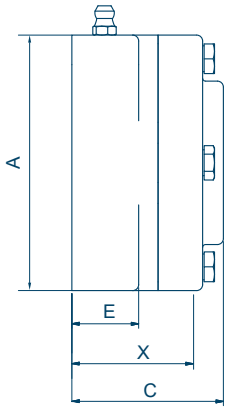

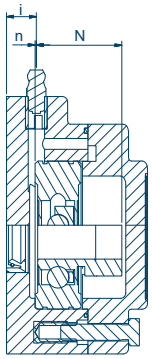

TYPE F4	Item no. closed cover	Item no. open cover	A	B	C	E	S	X	i	n	N	Weight [kg]
Ø20 mm	NG 20F40	NG20F41	86	63,5	51	22,5	9	43	11	0,5	31,0	0,52
Ø25 mm	NG25F40	NG25F41	95	70,0	52	22,5	9	44	11	0,5	31,5	0,63
Ø30 mm	NG30F40	NG30F41	108	82,5	58	22,5	11	48	11	0,5	36,7	0,91
Ø35 mm	NG35F40	NG35F41	118	92,0	60	22,5	13	50	11	0,5	39,4	1,10
Ø40 mm	NG40F40	NG40F41	130	101,5	65	22,5	13	56	11	0,5	44,7	1,50
Ø50 mm	NG50F40	NG50F41	143	111,0	70	26,5	17	58	12	0,5	46,0	1,84
Ø60 mm	NG60F40	NG60F41	175	143,0	82	28,5	17	70	15	0,5	54,8	3,09

All measurements are in millimeters. When ordering please use the catalogue numbers.

F2 - 2-bolt flange bearing units

Waterproof

Technical specifications & drawings

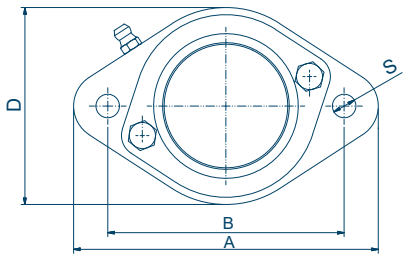

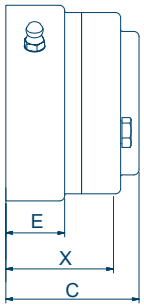

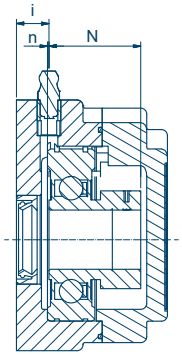

TYPE F2	Item no. closed cover	Item no. open cover	A	B	C	D	E	S	X	i	n	N	Weight [kg]
Ø20 mm	NGB20F20	NGB20F21	116	90	51	75	22,5	9	43	11	0,5	31,0	0,43
Ø25 mm	NGB25F20	NGB25F21	123	99	52	79	22,5	9	44	11	0,5	31,5	0,51
Ø30 mm	NGB30F20	NGB30F21	145	117	58	90	22,5	11	48	11	0,5	36,7	0,77
Ø35 mm	NGB35F20	NGB35F21	160	130	60	99	22,5	13	50	11	0,5	39,4	0,99
Ø40 mm	NGB40F20	NGB40F21	174	144	65	110	22,5	13	56	11	0,5	44,7	1,30
Ø50 mm	NGB50F20	NGB50F21	197	157	70	125	26,5	17	58	12	0,5	46,0	1,60
Ø60 mm	NGB60F20	NGB60F21	250	202	82	152	28,5	17	70	15	0,5	54,8	2,82

All measurements are in millimeters. When ordering please use the catalogue numbers.

F2 - 2-bolt flange bearing units

Waterproof

Technical specifications & drawings

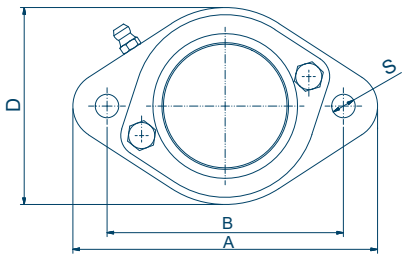

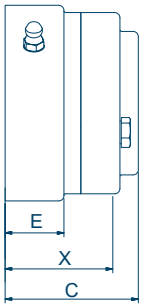

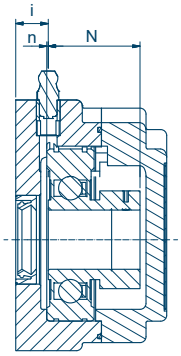

TYPE F2	Item no. closed cover	Item no. open cover	A	B	C	D	E	S	X	i	n	N	Weight [kg]
Ø20 mm	NG20F20	NG20F21	116	90	51	75	22,5	9	43	11	0,5	31,0	0,43
Ø25 mm	NG25F20	NG25F21	123	99	52	79	22,5	9	44	11	0,5	31,5	0,51
Ø30 mm	NG30F20	NG30F21	145	117	58	90	22,5	11	48	11	0,5	36,7	0,77
Ø35 mm	NG35F20	NG35F21	160	130	60	99	22,5	13	50	11	0,5	39,4	0,99
Ø40 mm	NG40F20	NG40F21	174	144	65	110	22,5	13	56	11	0,5	44,7	1,30
Ø50 mm	NG50F20	NG50F21	197	157	70	125	26,5	17	58	12	0,5	46,0	1,60
Ø60 mm	NG60F20	NG60F21	250	202	82	152	28,5	17	70	15	0,5	54,8	2,82

All measurements are in millimeters. When ordering please use the catalogue numbers.

SF2 - 2-bolt pillow block bearing units

Waterproof

Technical specifications & drawings

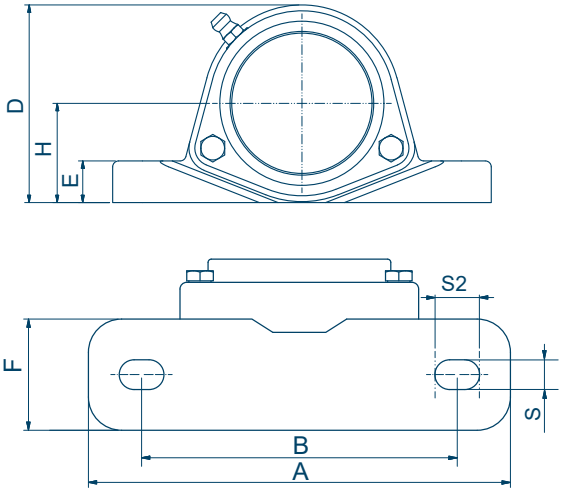

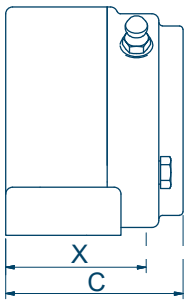

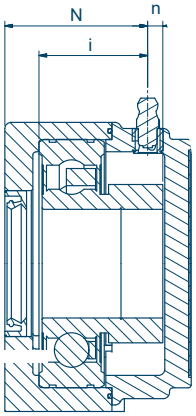

TYPE SF2	Item no. closed cover	Item no. open cover	A	B	C	D	E	F	H	S	S2	X	i	n	N	Weight [kg]
Ø20 mm	NGB20SF20	NGB20SF21	127	95	52	67	14	33,5	33,3	9	13,5	43	27	4,5	38	0,42
Ø25 mm	NGB25SF20	NGB25SF21	140	105	53	73	15	34,5	36,5	9	13,5	44	28	4,0	39	0,51
Ø30 mm	NGB30SF20	NGB30SF21	160	121	59	85	17	38,5	42,9	11	16,5	48	34	3,2	45	0,77
Ø35 mm	NGB35SF20	NGB35SF21	167	127	60	93	18	38,5	47,6	13	19,5	52	35	4,9	46	0,93
Ø40 mm	NGB40SF20	NGB40SF21	184	137	66	100	18	42,5	49,2	13	19,5	54	40	5,2	51	1,30

All measurements are in millimeters. When ordering please use the catalogue numbers.

SF2 - 2-bolt pillow block bearing units

Waterproof

Technical specifications & drawings

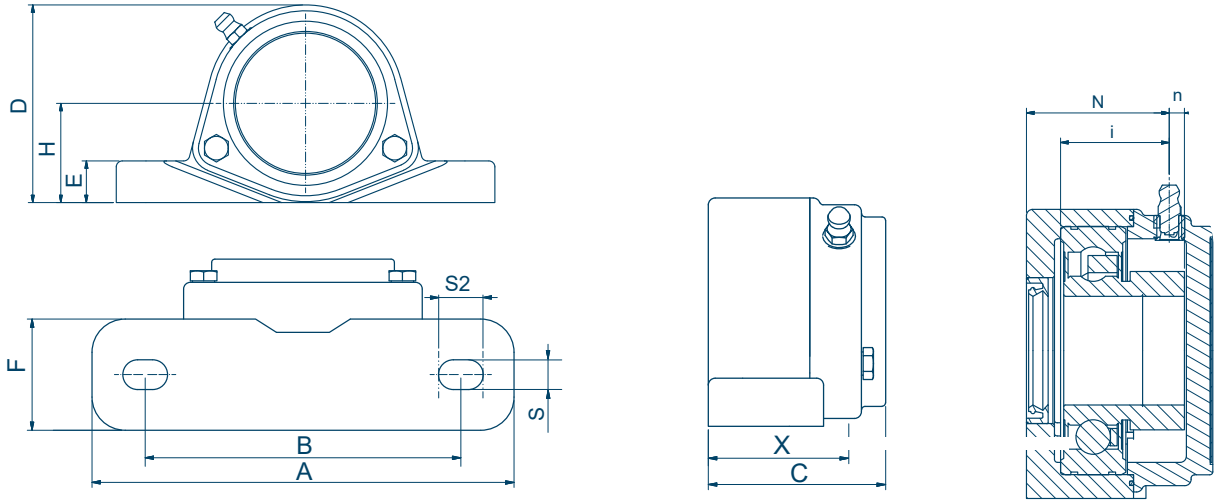

TYPE SF2	Item no. closed cover	Item no. open cover	A	B	C	D	E	F	H	S	S2	X	i	n	N	Weight [kg]
Ø20 mm	NG20SF20	NG20SF21	127	95	52	67	14	33,5	33,3	9	13,5	43	27	4,5	38	0,42
Ø25 mm	NG25SF20	NG25SF21	140	105	53	73	15	34,5	36,5	9	13,5	44	28	4,0	39	0,51
Ø30 mm	NG30SF20	NG30SF21	160	121	59	85	17	38,5	42,9	11	16,5	48	34	3,2	45	0,77
Ø35 mm	NG35SF20	NG35SF21	167	127	60	93	18	38,5	47,6	13	19,5	52	35	4,9	46	0,93
Ø40 mm	NG40SF20	NG40SF21	184	137	66	100	18	42,5	49,2	13	19,5	54	40	5,2	51	1,30

All measurements are in millimeters. When ordering please use the catalogue numbers.

S2 - 2-bolt pillow block bearing units with thread

Waterproof

Technical specifications & drawings

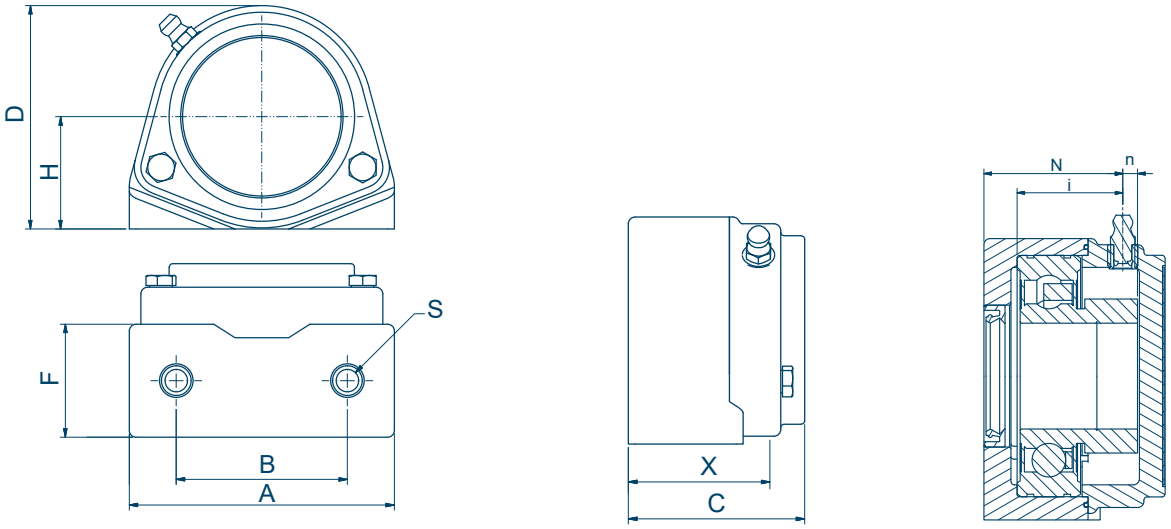

TYPE S2	Item no. closed cover	Item no. open cover	A	B	C	D	F	H	S	X	i	n	N	Weight [kg]
Ø20 mm	NGB20S20	NGB20S21	79	50,8	52	67	33,5	33,3	M8	38	27	4,5	31,0	0,40
Ø25 mm	NGB25S20	NGB25S21	87	50,8	53	73	34,5	36,5	M8	39	28	4,0	31,5	0,50
Ø30 mm	NGB30S20	NGB30S21	100	76,2	59	85	38,5	42,9	M10	45	34	3,2	36,7	0,80
Ø35 mm	NGB35S20	NGB35S21	110	82,6	60	93	38,5	47,6	M12	52	35	4,9	46,0	0,94
Ø40 mm	NGB40S20	NGB40S21	122	88,9	66	100	42,5	49,2	M12	58	40	5,2	51,0	1,30

All measurements are in millimeters. When ordering please use the catalogue numbers.

S2 - 2-bolt pillow block bearing units with thread

Waterproof

Technical specifications & drawings

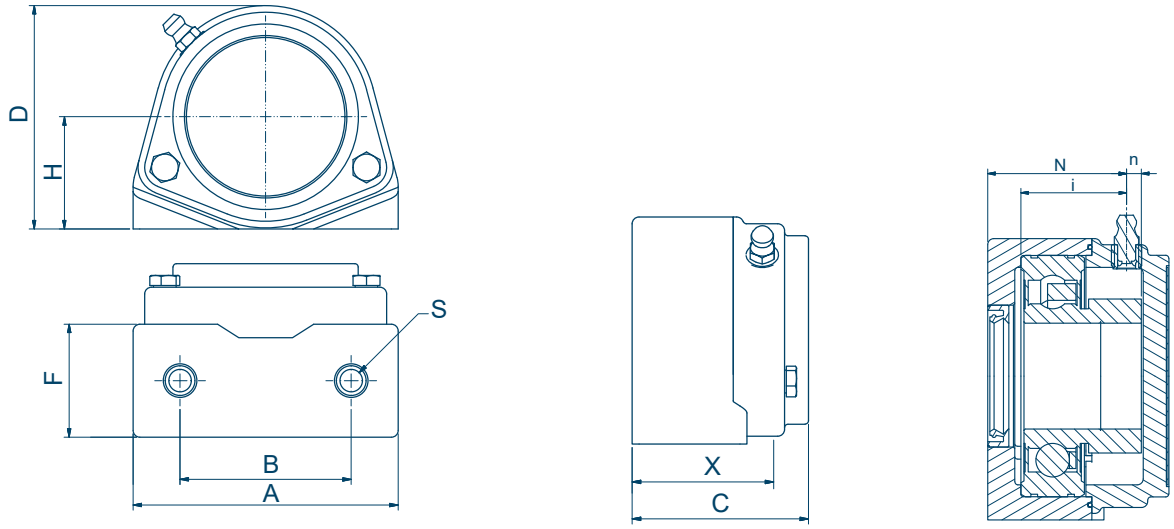

TYPE S2	Item no. closed cover	Item no. open cover	A	B	C	D	F	H	S	X	i	n	N	Weight [kg]
Ø20 mm	NG20S20	NG20S21	79	50,8	52	67	33,5	33,3	M8	38	27	4,5	31,0	0,40
Ø25 mm	NG25S20	NG25S21	87	50,8	53	73	34,5	36,5	M8	39	28	4,0	31,5	0,50
Ø30 mm	NG30S20	NG30S21	100	76,2	59	85	38,5	42,9	M10	45	34	3,2	36,7	0,80
Ø35 mm	NG35S20	NG35S21	110	82,6	60	93	38,5	47,6	M12	52	35	4,9	46,0	0,94
Ø40 mm	NG40S20	NG40S21	122	88,9	66	100	42,5	49,2	M12	58	40	5,2	51,0	1,30

All measurements are in millimeters. When ordering please use the catalogue numbers.

F3 - 3-bolt flange bearing units

Waterproof

Technical specifications & drawings

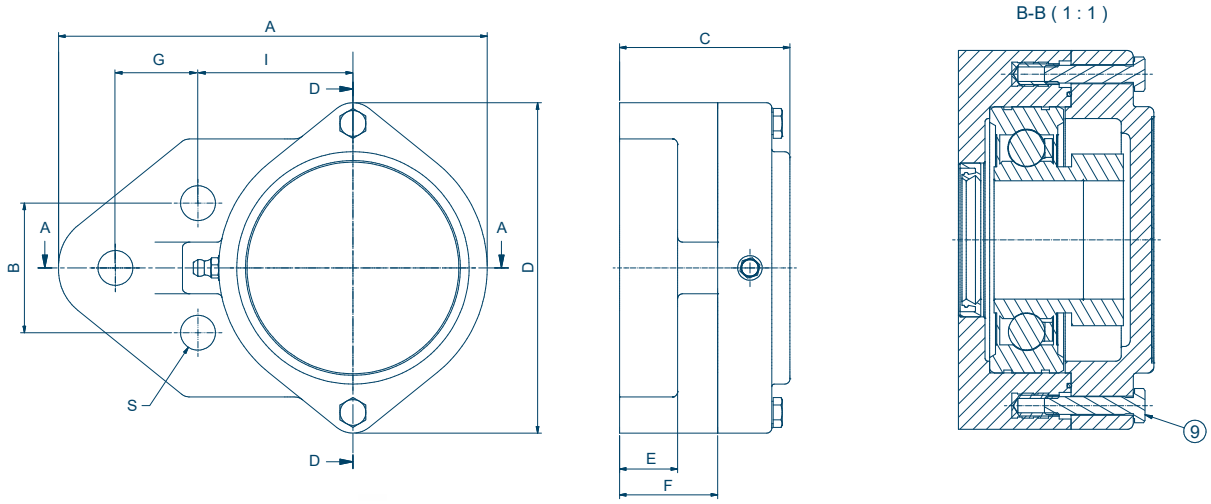

TYPE FBL	Item no. closed cover	Item no. open cover	A	B	C	D	E	F	G	H	I	S	Weight [kg]
Ø20 mm	NGB20F30	NGB20F31	109,2	38,1	51	93	22,5	29	22,2	42,9	42,9	11	0,264
Ø25 mm	NGB25F30	NGB25F31	123,5	41,3	52	100	22,5	30	28,6	46	46	11	0,316
Ø30 mm	NGB30F30	NGB30F31	140,5	47,6	58	110	22,5	34	31,8	52,4	52,4	11	0,437
Ø35 mm	NGB35F30	NGB35F31	156,5	50,2	60	118	22,5	33,5	31,8	60	60,3	13	0,509
Ø40 mm	NGB40F30	NGB40F31	166	50,8	66	128	22,5	38	32	60,3	60	13	0,639

All measurements are in millimeters. When ordering please use the catalogue numbers.

F3 - 3-bolt flange bearing units

Waterproof

Technical specifications & drawings

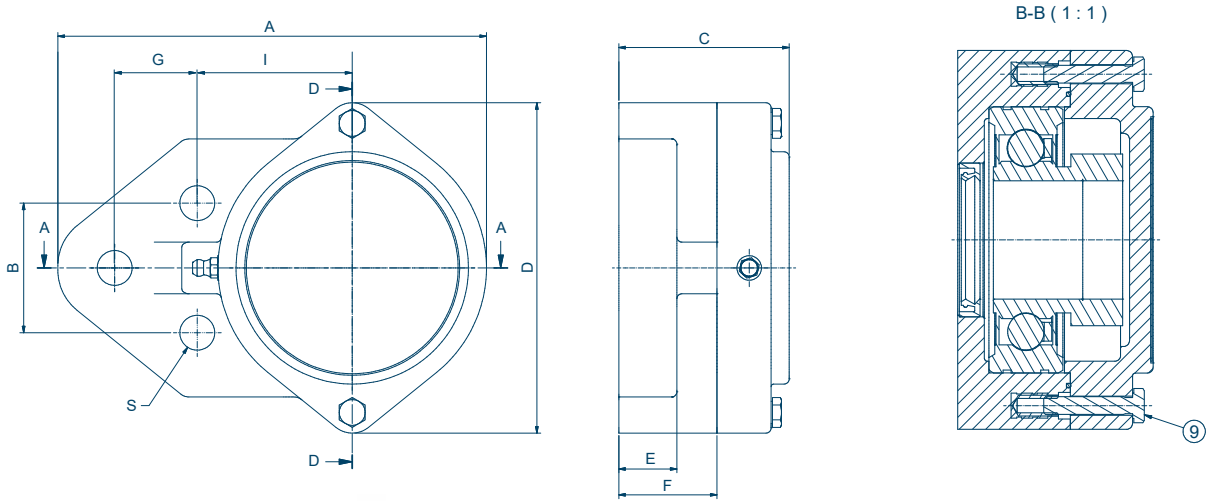

TYPE FBL	Item no. closed cover	Item no. open cover	A	B	C	D	E	F	G	H	I	S	Weight [kg]
Ø20 mm	NG20F30	NG20F31	109,2	38,1	51	93	22,5	29	22,2	42,9	42,9	11	0,264
Ø25 mm	NG25F30	NG25F31	123,5	41,3	52	100	22,5	30	28,6	46	46	11	0,316
Ø30 mm	NG30F30	NG30F31	140,5	47,6	58	110	22,5	34	31,8	52,4	52,4	11	0,437
Ø35 mm	NG35F30	NG35F31	156,5	50,2	60	118	22,5	33,5	31,8	60	60,3	13	0,509
Ø40 mm	NG40F30	NG40F31	166	50,8	66	128	22,5	38	32	60,3	60	13	0,639

All measurements are in millimeters. When ordering please use the catalogue numbers.

Mounting instructions

Waterproof NG bearing units

After removing the cover and the eccentric collar, push the bearing carefully onto the shaft without using any tools.

Slide the eccentric ring on the shaft and turn it until it is inside the recess of the bearing. Then tighten the eccentric ring to the shaft by turning it clockwise. Be sure to use correct tools.

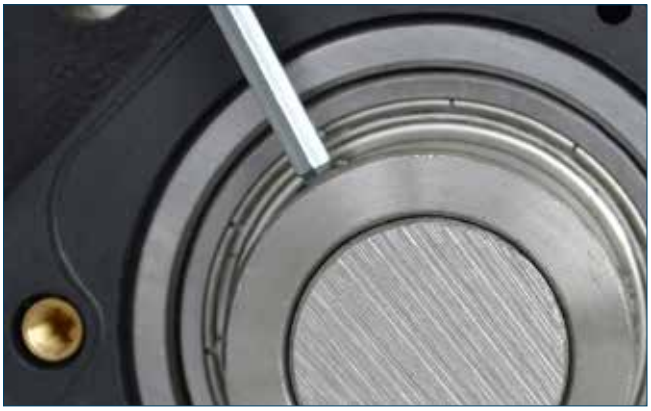

The eccentric ring is locked by tapping carefully with a punch in the hole of the eccentric ring. The grub screw is only to be tightened slightly. Be sure to use correct tools. When ensured, that the O-ring is seated correctly in the O-ring channel, the cover can be mounted.

On top of the housing is a stainless steel grease nipple installed for food grade grease filling. After installation of the housing, fill it with grease to lubricate the double lip seal and to prevent condensation and water intrusion. To be sure the housing is completely filled with grease, rotate the shaft while filling, and continue until the grease penetrates the oil seal ring.

Accessories

Hygienic bolt M5 to M16 in stainless steel

Features and advantages:

- The seal prevents water and bacteria from entering and avoids an unhygienic metal-to-metal assembly.
- The bolts are designed to match the sizes of current standard bolts, so wrench sizes, thread heights, etc., remain unchanged. This makes it easy to upgrade and replace standard bolts, making them ideal for machinery in certified hygienic wash-down environments.

Item no.	Thread	Diameter	Bolt head height	Bolt length
HV251005020	M5	Ø12	12	20
HV251005025				25
HV251006025	M6	Ø12	12	25
HV251006030				30
HV251006035				35
HV251006040				40
HV251008030	M8	Ø15	14	30
HV251008035				35
HV251008040				40
HV251008050				50
HV251008060				60
HV251008080				80
HV251008100				100
HV251010030	M10	Ø20	16	30
HV251010035				35
HV251010040				40
HV251010050				50
HV251010060				60
HV251010080				80
HV251010100				100
HV251012030	M12	Ø22	18	30
HV251012035				35
HV251012040				40
HV251012050				50
HV251012060				60
HV251012080				80
HV251012100				100
HV251016030	M16	Ø28	20	30
HV251016035				35
HV251016040				40
HV251016050				50
HV251016060				60
HV251016080				80
HV251016100				100

Hygienic spacer in stainless steel

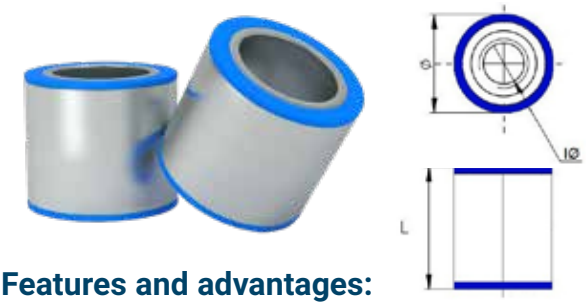

Features and advantages:

- These accessories are the best choice for equipment that must meet strict hygiene standards.
- The seal prevents the ingress of water and bacteria, and also avoids an unhygienic metal-to-metal assembly.

Item no.	Inner diameter	Outer diameter	Length of spacer
HV253008010	Ø8	Ø15	10
HV253008020			20
HV253010010	Ø10	Ø20	10
HV253010020			20
HV253012010	Ø12	Ø22	10
HV253012020			20
HV253016010	Ø16	Ø28	10
HV253016020			20

Hygienic nut in stainless steel

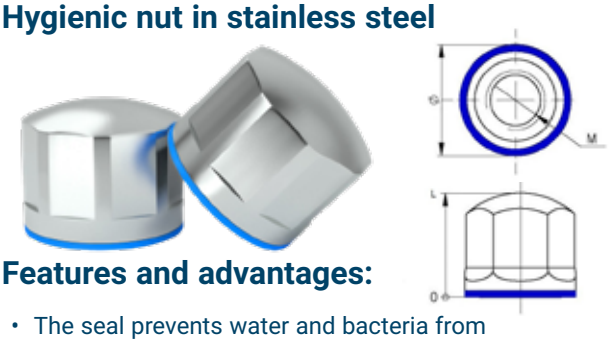

Features and advantages:

- The seal prevents water and bacteria from entering and avoids an unhygienic metal-to-metal assembly.
- The nuts match current standard sizes, making upgrades and replacements easy. They are ideal for machinery in certified hygienic wash-down environments.

Item no.	Thread	Diameter	Nut height
HV252008014	M8	Ø15	14
HV252008021			21
HV252010016	M10	Ø20	16
HV252010024			24
HV252012018	M12	Ø22	18
HV252012027			27
HV252016020	M16	Ø28	20
HV252016030			30

Stainless steel bearing units

The stainless steel bearing units are very suitable for the food industry and other demanding environments, due to the hygienic design and minimum of maintenance. The mini stainless steel bearings are extra narrow bearings in hygienic design.

Features and advantages:

- Stainless steel housings AISI 304
- Stainless steel bearings AISI 440C
- Stainless steel grease nipples AISI 440C
- No surface coating are required
- Excellent life span
- Screw set lock
- Operating temperature from -20° to +120°C
- Maintenance free except regular greasing when needed

Features and advantages, the mini bearings:

- Stainless steel housings AISI 304
- Stainless steel bearings AISI 440C
- Sealings NBR
- Narrow bearings
- No surface coating are required
- Eccentric collar lock

Type of grease nipples:

Type: Straight stainless
- (Standard)
- Size: M6x1 mm
- Catalogue no.: KI820010

Type: 45° stainless
- Size: M6x1 mm
- Catalogue no.: KI820015

Type: 90° stainless
- Size: M6x1 mm
- Catalogue no.: KI820020

SF - 4-bolt stainless steel flange bearing units

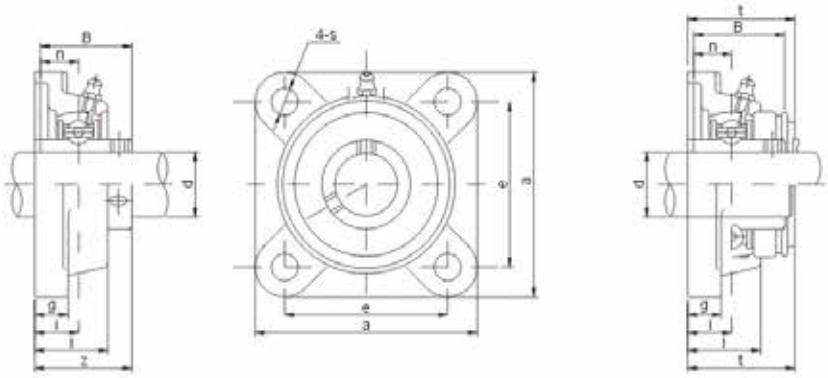

Item no.	d	a	e	i	g	l	s	z	B	n	Bolt size	Weight [kg]
SUCF204S	20	86	64	15	12	25,5	12	33,3	31,0	12,7	M10	0,56
SUCF205S	25	95	70	16	14	27	12	35,8	34,1	14,3	M10	0,84
SUCF206S	30	108	83	18	14	31	12	40,2	38,1	15,9	M10	1,15
SUCF207S	35	117	92	19	16	34	14	44,4	42,9	17,5	M12	1,52
SUCF208S	40	130	102	21	16	36	16	51,2	49,2	19,0	M14	1,88
SUCF209S	45	137	105	22	18	38	16	52,2	49,2	19,0	M14	2,25
SUCF210S	50	143	111	22	18	40	16	54,6	51,6	19,0	M14	2,54
SUCF211S	55	162	130	25	20	43	19	58,4	55,6	22,2	M16	3,46
SUCF212S	60	175	143	29	20	48	19	68,7	65,1	25,4	M16	4,41

All measurements are in millimeters, When ordering please use the catalogue numbers,

SFL - 2-bolt stainless steel flange bearings

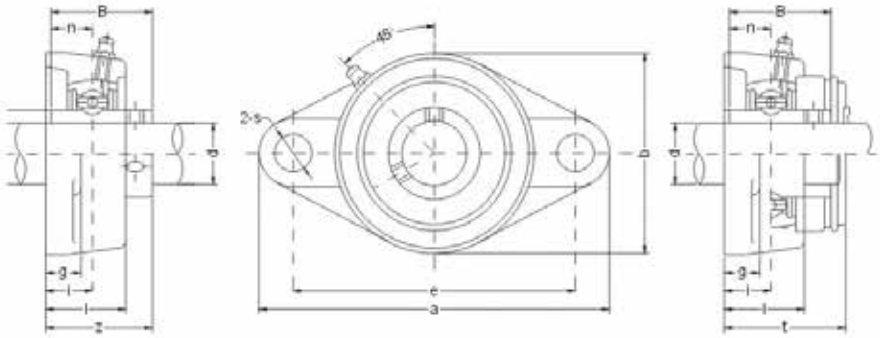

Item No.	d	a	e	i	g	l	S	b	z	B	n	Bolt size	Weight [kg]
SUCFL204S	20	113	90	15	11	25,5	12	60	33,3	31,0	12,7	M10	0,41
SUCFL205S	25	130	99	16	13	27	16	68	35,8	34,1	14,3	M14	0,62
SUCFL206S	30	148	117	18	13	31	16	80	40,2	38,1	15,9	M14	0,89
SUCFL207S	35	161	130	19	14	34	16	90	44,4	42,9	17,5	M14	1,14
SUCFL208S	40	175	144	21	14	30	16	90	51,2	49,2	19,0	M14	1,48
SUCFL209S	45	188	148	22	15	38	19	108	52,2	49,2	19,0	M16	1,84
SUCFL210S	50	197	157	22	15	40	19	115	54,6	51,6	19,0	M16	2,22
SUCFL211S	55	224	184	25	18	43	19	130	58,4	55,6	22,2	M16	3,06
SUCFL212S	60	250	202	29	18	48	23	140	68,7	65,1	25,4	M20	3,87

All measurements are in millimeters. When ordering please use the catalogue numbers.

SP - Stainless steel pillow block bearings

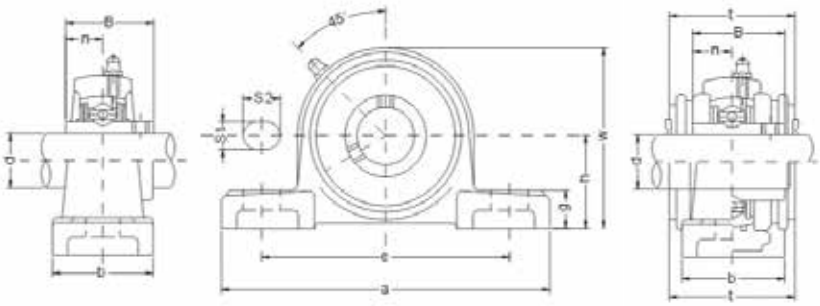

Item No.	d	h	a	e	b	S1	S2	g	w	B	n	Bolt size	Weight [kg]
SUCP204S	20	33,3	127	95	38	13	19	14	65	31,0	12,7	M10	0,66
SUCP205S	25	36,5	140	105	38	13	19	15	71	34,1	14,3	M10	0,85
SUCP206S	30	42,9	165	121	48	17	20	17	84	38,1	15,9	M14	1,27
SUCP207S	35	47,6	167	127	48	17	20	18	93	42,9	17,5	M14	1,64
SUCP208S	40	49,2	184	137	54	17	20	18	100	49,2	19,0	M14	1,93
SUCP209S	45	54,0	190	146	54	17	20	20	106	49,2	19,0	M16	2,24
SUCP210S	50	57,2	206	159	60	20	23	21	113	51,6	19,0	M16	2,78
SUCP211S	55	63,5	219	171	60	20	23	23	125	55,6	22,2	M16	3,46
SUCP212S	60	69,8	241	184	70	20	23	25	138	65,1	25,4	M16	5,03

All measurements are in millimeters. When ordering please use the catalogue numbers.

MUFL - Mini stainless steel flange bearings

with eccentric collar lock

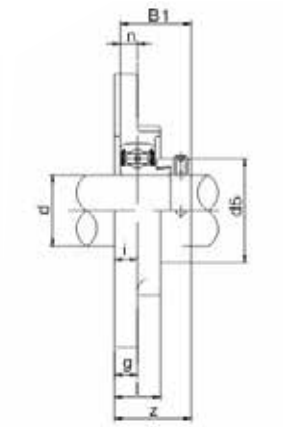

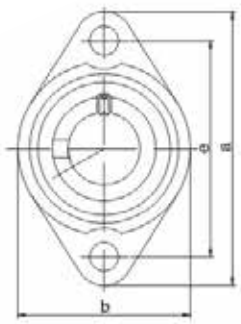

Item No.	d	a	e	i	g	l	s	b	B1	n	d5	Bolt size	Weight [kg]
MUFL000	10	60	45	5,5	5,5	11,5	7	36	17,5	4,0	17	M6	0,06
MUFL001	12	63	48	5,5	5,5	11,5	7	38	17,5	4,0	19	M6	0,07
MUFL002	15	67	53	6,5	6,5	13	7	42	18,5	4,5	22	M6	0,10
MUFL003	17	71	56	7,0	7,0	14	7	46	20,5	5,0	25	M6	0,13
MUFL004	20	90	71	8,0	8,0	16	10	55	24,5	6,0	30	M8	0,20
MUFL005	25	95	75	8,0	8,0	16	10	60	25,5	6,0	36	M8	0,24
MUFL006	30	112	85	9,0	9,0	18	13	70	26,5	6,5	42	M10	0,35
MUFL007	35	122	95	10,0	10,0	20	13	80	29,5	7,0	48	M10	0,50

All measurements are in millimeters. When ordering please use the catalogue numbers.

MKFL - Mini stainless steel flange bearings

with set screw lock

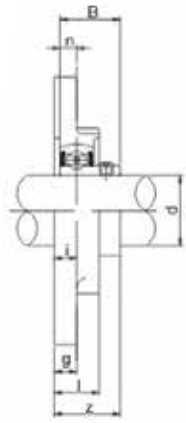

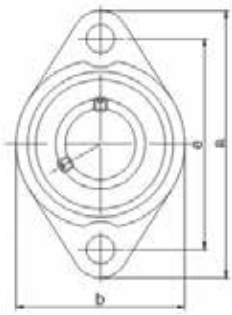

Item no.	d	a	e	i	g	l	s	b	Z	B	n	Bolt size	Weight [kg]
MKFL000	10	60	45	5,5	5,5	11,5	7	36	15,5	14	4,0	M6	0,06
MKFL001	12	63	48	5,5	5,5	11,5	7	38	16,0	14,5	4,0	M6	0,07
MKFL002	15	67	53	6,5	6,5	13	7	42	18,6	16,5	4,5	M6	0,10
MKFL003	17	71	56	7,0	7,0	14	7	46	19,5	17,5	5,0	M6	0,13
MKFL004	20	90	71	8,0	8,0	16	10	55	23,0	21	6,0	M8	0,20
MKFL005	25	95	75	8,0	8,0	16	10	60	24,5	22,5	6,0	M8	0,24
MKFL006	30	112	85	9,0	9,0	18	13	70	27,0	24,5	6,5	M10	0,35
MKFL007	35	122	95	10,0	10,0	20	13	80	29,5	26,5	7,0	M10	0,50

All measurements are in millimeters. When ordering please use the catalogue numbers.

MKP - Mini stainless steel pillow block bearings

with set screw lock

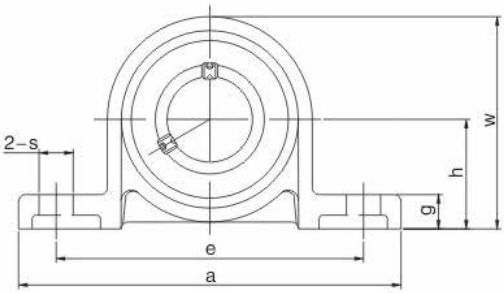

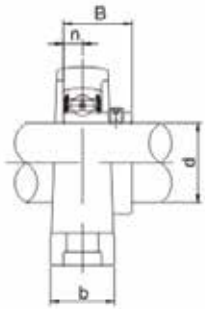

Item No.	d	h	a	e	b	s	g	W	B	n	Bolt size	Weight [kg]
MKP000	10	18	67	53	16	7	6	35	17,5	4,0	M6	0,07
MKP001	12	19	71	56	16	7	6	38	17,5	4,0	M6	0,09
MKP002	15	22	80	63	16	7	7	43	18,5	4,5	M6	0,13
MKP003	17	24	85	67	18	7	7	47	20,5	5,0	M6	0,16
MKP004	20	28	100	80	20	10	9	55	24,5	6,0	M8	0,23
MKP005	25	32	112	90	20	10	10	62	25,5	6,0	M8	0,29
MKP006	30	36	132	106	26	13	11	70	26,5	6,5	M10	0,45
MKP007	35	40	150	118	26	13	13	80	29,5	7,0	M10	0,59

All measurements are in millimeters. When ordering please use the catalogue numbers.

MUP - Mini stainless steel pillow block bearings

with eccentric collar lock

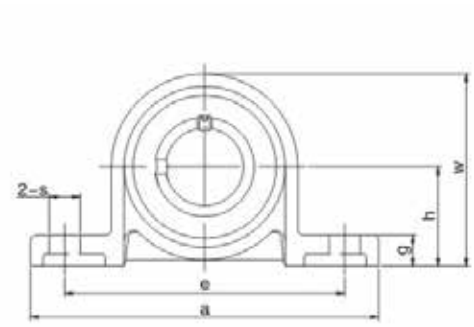

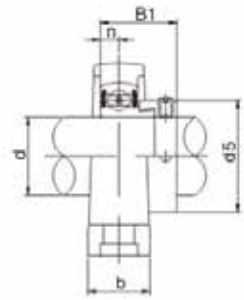

Item No.	d	h	a	e	b	s	g	W	B1	n	d5	Bolt size	Weight [kg]
MUP000	10	18	67	53	16	7	6	35	17,5	4,0	17	M6	0,08
MUP001	12	19	71	56	16	7	6	38	17,5	4,0	19	M6	0,09
MUP002	15	22	80	63	16	7	7	43	18,5	4,5	22	M6	0,13
MUP003	17	24	85	67	18	7	7	47	20,5	5,0	25	M6	0,16
MUP004	20	28	100	80	20	10	9	55	24,5	6,0	30	M8	0,23
MUP005	25	32	112	90	20	10	10	62	25,5	6,0	36	M8	0,29
MUP006	30	36	132	106	26	13	11	70	26,5	6,5	42	M10	0,45
MUP007	35	40	150	118	26	13	13	80	29,5	7,0	48	M10	0,59

All measurements are in millimeters. When ordering please use the catalogue numbers.

bj·gear

Customisation is our standard

BJ-Gear A/S
Niels Bohrs Vej 47
DK-8660 Skanderborg, Denmark
VAT No. DK 10166470

Phone +45 87 40 80 80
Email bj@bj-gear.com
Website www.bj-gear.com

Copyright © 2025 BJ-Gear A/S. All product rights reserved. All data, illustrations, photos, drawings and statements are for general information only and subject to change without notice and should not be considered as a warranty or legal obligation of any kind.

NG | 2025 | UK